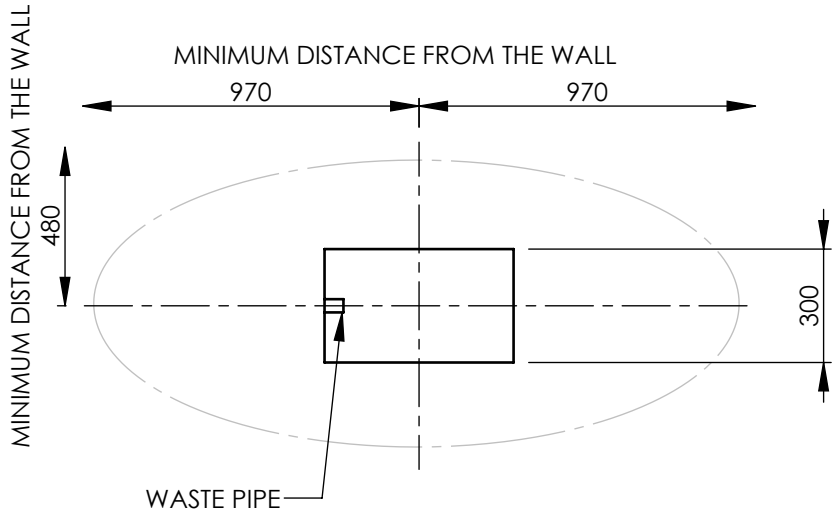
MINIMUM DISTANCE FROM THE WALL
970
970
MINIMUM DISTANCE FROM THE WALL
480
300
WASTE PIPE

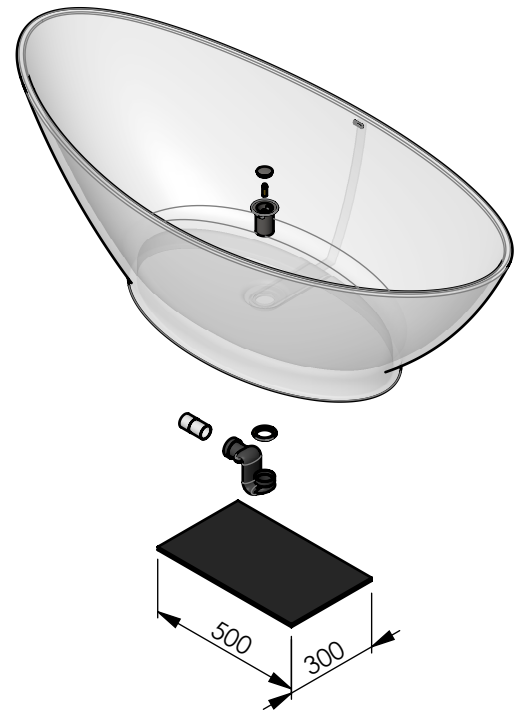
500
300

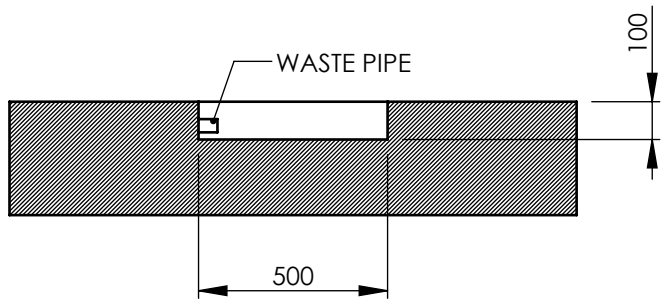
WASTE PIPE
100
500

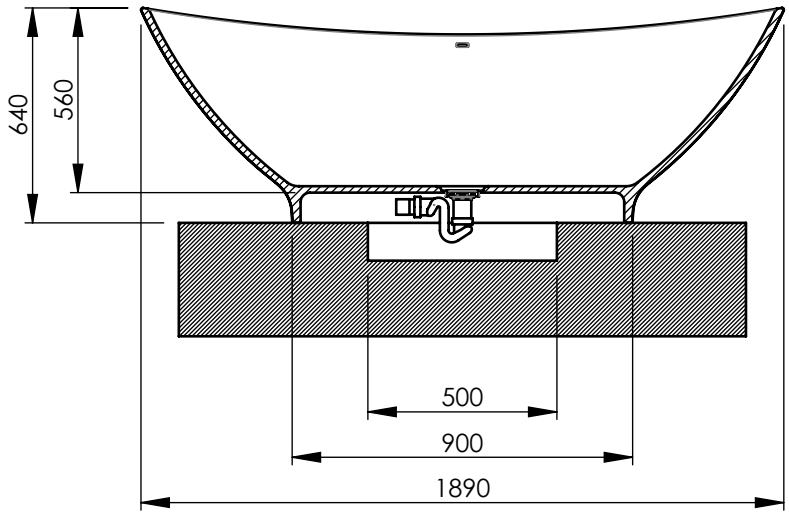
640
560
500
900
1890

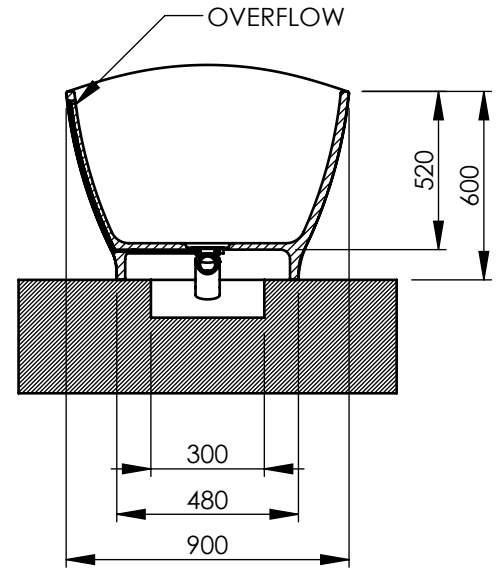
OVERFLOW
520
600
300
480
900